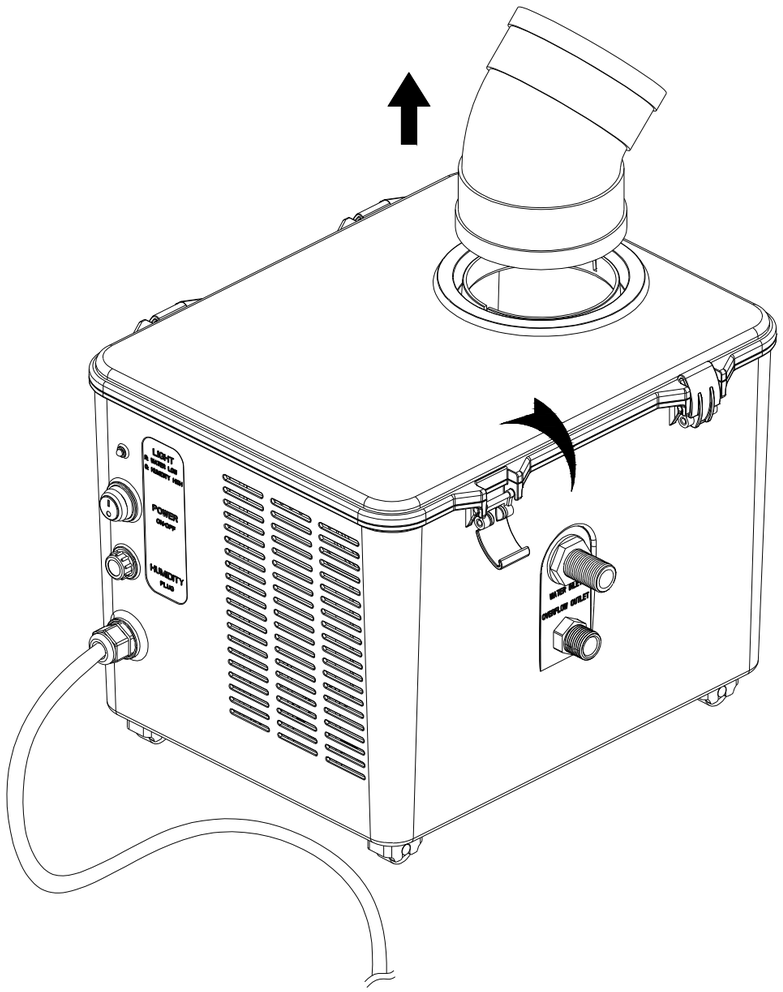
LIGHT
POWER
ON/OFF
HUMIDITY
PLUG
WATER
OVERFLOW OUTLET

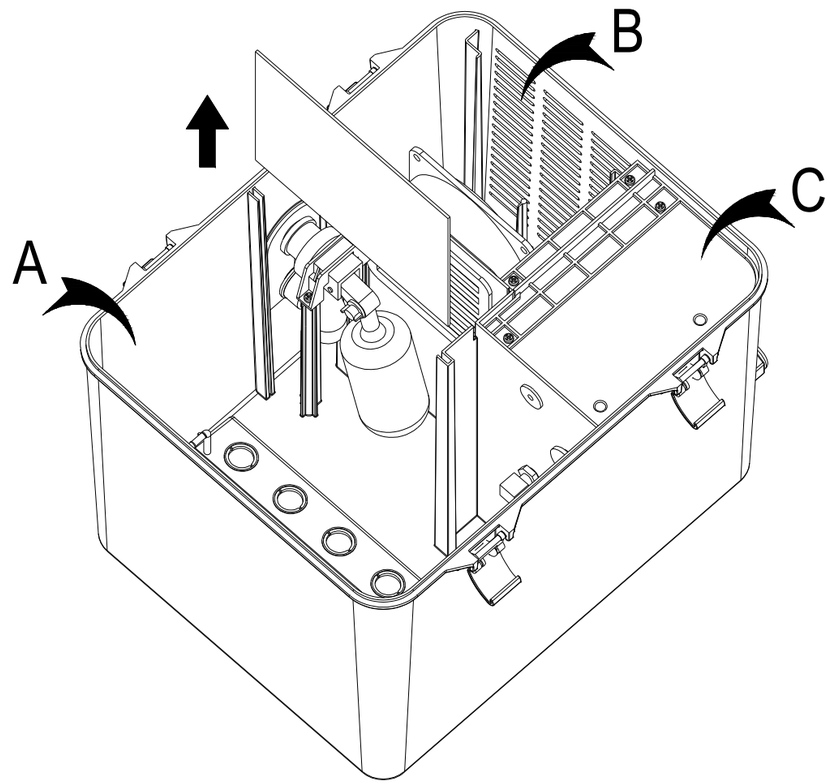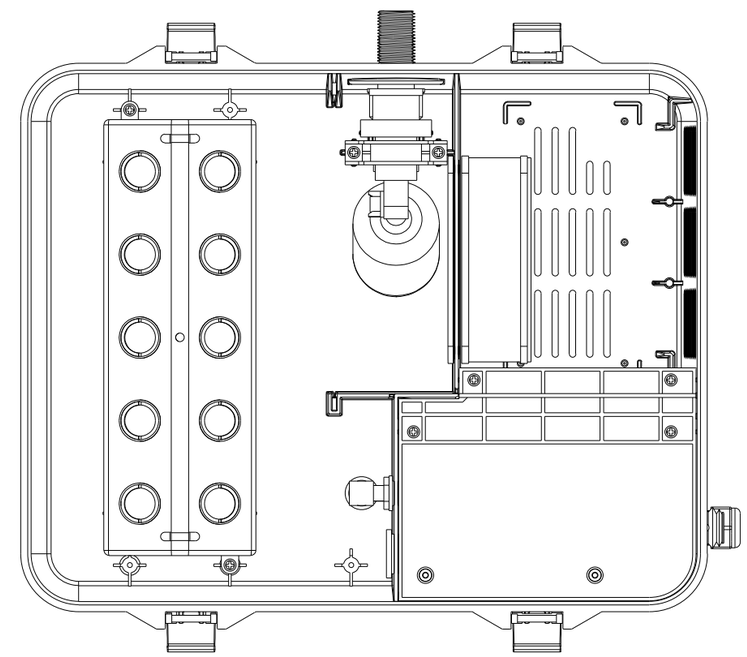
A
B
C